ELSEVIER

Journal of International Economics 58 (2002) 177–209

Journal of INTERNATIONAL ECONOMICS

www.elsevier.com/locate/econbase

Trade interdependence, the international financial institutions, and the recent evolution of sovereign-debt renegotiations

Mikhail M. Klimenko*

Graduate School of International Relations and Pacific Studies, University of California, San Diego, La Jolla, CA 92093-0519, USA

Received in revised form 9 November 2000; accepted 31 August 2001

Abstract

This paper analyzes the effect of a debtor country's pattern of trade with commercial creditors' home countries on the outcome of debt-rescheduling negotiations. The analysis reveals that a debtor country with more market power has greater leverage in a three-way debt-rescheduling negotiation that includes the debtor country, its creditors and the International Financial Institutions (IFIs). The paper also considers the effects of the IFI sovereign-debt policy on the bargaining power of the parties in debt-rescheduling negotiations. Two bargaining frameworks analyzed and compared in the paper represent the negotiation mechanism at different stages of the IFI sovereign-debt policy evolution.
© 2002 Elsevier Science B.V. All rights reserved.

Keywords: Bargaining games; Negotiations; Debt rescheduling

JEL classification: C78; F34

1. Introduction

The evolution of strategies undertaken by industrialized countries' governments and International Financial Institutions (IFIs)[1] in regard to the problems of

*Corresponding author. Tel.: +1-858-534-5014; fax: +1-858-534-3939.
E-mail address: mklimenko@ucsd.edu (M.M. Klimenko).

[1]The International Monetary Fund (IMF), the World Bank and regional development banks.

0022-1996/02/$ – see front matter © 2002 Elsevier Science B.V. All rights reserved.
PII: S0022-1996(01)00165-9

sovereign debt has gone through several stages.[2] The current stage of this evolution began in the aftermath of a series of emerging-market crises in the 1990s which demonstrated the inadequacy of the existing international institutions and rules to cope with the new depth of integration and increased volatility of international capital markets.[3] The search for a new role for the IFIs in the future international financial architecture can greatly benefit from greater understanding of the effects of IFI involvement in debt-rescheduling negotiations between debtor countries and their private creditors.

A prevailing view in the existing literature on sovereign debt is that debtor countries are deterred from default by the threat of penalties which can hinder their temporal and intertemporal trade (i.e., trade in goods and trade in assets).[4] However, the creditors do not benefit directly from penalties against the country with arrears. Therefore, following a default, the sides can reach a more efficient outcome by bargaining over the international surplus generated by free trade relative to trade inhibited by default penalties against the debtor country. This bargaining outcome determines the ex ante creditworthiness of the country.

While default penalties can serve as a deterrent against defaults, they also reduce the welfare of the rest of the world (ROW) that benefits from freer trade with the debtor country. This induces the official bilateral creditors and the IFIs representing the interests of their major shareholder countries in the ROW to take part in debt-rescheduling negotiations. The official bilateral and multilateral participation in the negotiations affects the relative bargaining power of the debtor country and its private creditors in both dynamic and static senses. In the static-bargaining sense, official participation redefines the surplus to be divided in negotiation. In the dynamic-bargaining sense, official policies can introduce delay in reaching the final agreement which is costly for the impatient parties.

The international surplus generated by default-free trade is affected by the degree of economic interdependence between the debtor country and the ROW. The existing literature shows how the country's dependency on trade with the ROW can weaken its threat point and thereby reduce its static bargaining power in

[2]For a historical account of the IFI policy toward sovereign debt see Eichengreen and Portes (1995).

[3]Although much of the cross-border lending leading to the emerging-market crises in the late 1990s was to private banks, most of these banks were implicitly or explicitly insured by their governments. Therefore, country-wide runs on local banks immediately translated into huge increases in sovereign government liabilities.

[4]Different versions of this approach are adopted by Eaton and Gersovitz (1981), Cohen and Sachs (1986), Bulow and Rogoff (1989a), Diwan (1990), and Aizenman (1991). Bulow and Rogoff (1989b) show that as long as governments can earn the market rate of return by saving abroad, models based on reputation alone cannot support sovereign debt and therefore, default penalties have to be part of any model of sovereign borrowing. However, Cole and Kehoe (1998) argue that while debtors' tarnished reputations may not inhibit their access to all means of intertemporal consumption smoothing, there could be damaging reputational spillovers to many other relationships that involve trust. In that case, reputation can support substantial sovereign debt. Kletzer and Wright (2000) model sovereign borrowing as intertemporal barter that is supported by renegotiation-proof punishment threats.

a *bilateral* relationship with its commercial creditors.[5] However, in the context of *multilateral* negotiations among the country, its commercial creditors *and* the IFIs, it is important to consider the possibility that the ROW may be dependent on the country as a market for exports and/or as a source of essential imports. If we assume that the IFIs represent the interests of their major shareholder countries (i.e., the ROW), then it follows that the trade dependency of the latter on the debtor country can affect the IFI strategy toward debt-rescheduling negotiation.

To analyze the effect of economic *interdependence* between a debtor country and the ROW on the outcome of debt-rescheduling negotiations, this paper considers these negotiations in the context of an intra-industry trade model with product differentiation. In this framework, normal trade ties with the debtor country are more valuable for consumers in the ROW if the debtor country supplies the world market with a wide variety of differentiated products. Product differentiation generates a market power which creates incentives for even a very small country to manipulate its terms of trade by levying positive optimal tariffs as long as it *exports* at least some differentiated varieties (see Gros, 1987; Krugman, 1991). This market power increases with the degree of product differentiation and the country's share of differentiated products.[6] This paper argues that the country's market power also affects its threat point in bargaining with its creditors and the IFIs over the terms of debt rescheduling. Therefore, the relative bargaining power of the parties in debt-rescheduling negotiations is linked to the country's market power as determined by the production of differentiated goods.[7] This argument implies that trade openness and export diversification may be used by the debtor country to *increase* its leverage in the sovereign-debt renegotiations and extract larger sidepayments from the IFIs and the ROW governments in multilateral bargaining. Moreover, private creditors who have claims on the wealth of a country with highly diversified production may also be able to extract more sidepayments from the IFIs. These sidepayments can take the form of monetary transfers or policy changes that would be favorable to either the debtor country or its private creditors.

[5]For example, Aizenman (1991) and Diwan (1990) showed that the country's bargaining power in negotiations with its private creditors can be reduced (i.e., creditworthiness can be increased) by export-oriented investments or investments in sectors dependent on imported inputs.

[6]The market power of a country can be measured by the market power of its differentiated product exporters as a group. Goldberg and Knetter (1999) developed a very useful empirical framework for estimating the market power of a source-country export group in a destination country. In that framework, the degree of the market power of the export group is measured by the elasticity of the residual demand the group faces collectively in the destination market. This elasticity can be identified by exchange rate shocks which shift the competitiveness of the source-country exporting firm or a group of firms relative to other firms in the destination market.

[7]Obviously, market power based on the share in the world supply of a homogeneous good also enables the country to use the tariff policy to achieve more favorable terms of trade. This power can also be used to leverage the country's position in three-way negotiations over the terms of debt repayment.

Empirical studies suggest that external debt of the countries with more diversified economies is characterized by a larger share of highly subsidized official loans. Demirgüç-Kunt and Detragiache (1994) compared the shares of official creditors in external debts of four Latin American countries (Argentina, Brazil, Chile and Venezuela) and four Asian countries (Indonesia, South Korea, the Philippines and Turkey) in 1973–1989. They found that the Asian countries paid considerably lower average interest rates on external debt because official creditors charged them lower rates and provided a greater share of these countries' total external debt. Differences in the share of the subsidized official debt can account for differences in the average external-debt interest rates of 3 to 4 percentage points between these two groups of countries. Therefore, through greater exposure to official creditors, the Asian countries obtained substantial subsidies in the form of loans at below-market interest rates. Since the exports of the Asian countries were more diversified than the exports of the Latin American countries, this evidence of differential treatment of major debtor countries by the official bilateral and multilateral creditors is consistent with the theory offered in this paper.

Once we develop a basic framework for clarifying the relative static bargaining power of the parties (i.e., their threat points) in three-way debt-rescheduling negotiations, we can examine the effect of different IFI policies toward sovereign debt on the negotiation outcomes in the dynamic bargaining context. Specifically, we study how IFI policy can affect the strategic incentives of a country and its commercial creditors in negotiation by influencing the timing of IFI transfers to the country and the ability of the IFIs to enforce conditionality and exert pressure on the creditors to share the burden of debt relief. The paper analyzes two dynamic bargaining frameworks that represent multilateral negotiations at different stages of the evolution of the IFI strategy towards sovereign debt. One framework is based on the *unanimity* regime that requires consent of *all* parties *before* the implementation of a three-way package of debt reduction, new loans and IFI-supervised adjustment policies. The other framework allows the sides to work out the final agreement through a *sequence* of separate (but interrelated) partial agreements.[8] The unanimity framework corresponds to a combination of policies of the IFI-enforced concerted lending and *not lending to countries with arrears* on the servicing of debt owed to private creditors. The IFIs implemented these policies before the adoption of the Brady plan. The sequential (and non-unanimous) framework corresponds to the Brady plan and represents a policy of voluntary market-based debt reduction in combination with the policy of *lending into*

[8]This framework is based on a version of the so-called bargaining model with exit. Different variations of this model were studied by Chae and Yang (1988) and Krishna and Serrano (1996). In these models, players who are satisfied with the proposed agreement 'exit' from the game with guaranteed shares of the cake, while those who are unhappy may continue bargaining over the remains of the cake. Thus, while the game is multilateral, there is a possibility for partial deals.

arrears. The latter framework also incorporates certain aspects of the proposals on sovereign-debt restructuring in the light of bankruptcy reorganization law principles, now being actively discussed in the context of the new international financial architecture (e.g., Eichengreen, 1999).

The requirement of the unanimous agreement for the implementation of a debt-rescheduling bargain reflects the relationship that existed between the IFIs, debtor countries and the commercial creditors during the early stages of the evolution of the IFI role in sovereign-debt rescheduling. Under the IMF policy of not lending to countries in arrears, which was implemented during the 1970s and most of the 1980s, disagreement between a country and its private creditors over the terms of debt rescheduling could hold up disbursement of IMF stand-by loans and structural adjustment loans from the World Bank to the country.[9] At the same time, the IFIs and the governments of industrialized countries were reluctant to come up with new money for debtor countries unless their commercial creditors would agree to share the burden of rescheduling their existing debt. Since commercial creditors would not reschedule existing debt and provide new liquidity without a country's consent to implementing an IMF-supervised economic adjustment program, bargaining between the country and the IMF over terms of conditionality could hold up the disbursement of new private loans to the debtor country (e.g., Dooley, 1995).

The implementation of the Brady plan introduced important changes in the rescheduling process. Within the framework of the market-based voluntary debt reduction, the IFI resources were used to collateralize a menu of exit bonds which were offered to private creditors in exchange at significant discounts for their claims on the debtor countries. Although collateral enhancements financed by the IFIs were used to reinforce modified debt contracts, the creditor banks had the option of keeping their old claims and lending new money. While the rescheduling process preserved its three-way structure, the policy of lending into arrears and the shift from mandatory concerted lending to the policy of voluntary debt reduction, supported by the IFI-financed enhancements, led to a separation of the multilateral

[9]Conditioning new loans to a debtor country on its agreement with the banks served to encourage burden-sharing by the banks whose bargaining positions were weak in the early 1980s due to the size of their exposure. This strategy was a part of a bigger policy of involuntary or concerted lending, which was designed to overcome coordination failure among private creditors and coalesce them into providing new liquidity to debtor countries. According to the policy of concerted lending, each bank was to lend an amount proportional to its existing exposure. However, as the banks' balance sheets straightened, their bargaining position ossified and the official strategy of not lending to countries with arrears turned into a lever used by the banks against the debtor governments. The banks essentially had veto power over the disbursement of new IFI money in addition to refusing to provide their own (see Eichengreen, 1999, pp. 71–72). The strategy of lending into arrears broke that veto power and enhanced the bargaining position of a debtor country. Most of the recent proposals on the new international financial architecture call for expanding the IFI policy of lending into arrears and emphasize its positive effect on the sovereign-debt workouts (e.g., Eichengreen, 1999; Radelet, 1999).

bargaining process into three autonomous (but connected) bilateral negotiations. Conditionality agreement between the country and the IFIs was no longer a prerequisite for the debt-rescheduling agreement between the country and the banks.[10] Both of these agreements were separated from the implicit bargain between the banks and the IFIs regarding the size of new official enhancement loans which were residual determinants of the sharing of the debt-relief burden.

Our comparison of the two bargaining frameworks suggests that the IFI participation is more costly for their shareholders under the type of rescheduling process that prevailed with the introduction of the Brady plan. Although the bargaining power of the debtor country vis-à-vis its commercial creditors did not change after the transition from one regime to another, the country and its commercial creditors jointly gained in their ability to extract sidepayments from the IFIs. This conclusion offers a new argument in evaluating the policy innovations associated with the Brady plan. While it is true that many of these innovations benefited the debtor country, these benefits came at the expense of IFI shareholders rather than the banks, which were capable of capturing an even larger share of the aid content in the official loans to the debtor country. For example, lending into arrears was conceived as a policy instrument that would increase the banks' share of the burden of debt reduction. Instead, this paper suggests that this policy increased the IFI share of the burden and reduced the banks' share of the burden even further.

Although there are many studies analyzing the effects of the IFI policies on sovereign borrowing informally, there have been only a few attempts to model the involvement of official creditors and international organizations in negotiations between commercial banks and debtor countries explicitly.[11] Bulow and Rogoff's (1988) approach is most closely related to this paper's representation of the IFIs as a strategic player in a dynamic bargaining framework. Bulow et al. (1992) applied the Nash bargaining solution to the analysis of four-way rescheduling negotiations involving the IFIs, official bilateral creditors, the debtor country and the banks. Wells (1993) employed an asymmetric-information bilateral bargaining model to analyze how the IMF policy of lending into arrears changed the bargaining strengths of the debtor country and its creditors. However, in her framework, the IMF is an exogenous source of funds rather than a strategic actor. Bhattacharya and Detragiache (1994) examined a framework in which the presence of a

[10]There are several examples of countries that managed to avoid the IMF conditionality while using financial instruments from the Brady menu to reduce their debts to commercial banks. One such example is Brazil, which self-financed the enhancements for conversion bonds and did not rely on official funding from the IMF (see Cline, 1995).

[11]Various aspects of bilateral debtor–creditor relationships have been studied in the literature on sovereign debt. Methodologically, this paper is most closely related to those studies that employed the bargaining-theoretic approach to the analysis of strategic interaction between sovereign borrowers and commercial creditors. See, for example, Özler (1989), Fernández and Rosenthal (1990), Chang (1995), and Fernández and Özler (1999).

multilateral agency enhances the credibility of the creditor-country government's commitment not to bail out defaulting sovereign debtors. In their framework, the multilateral agency is non-strategic and its role is to prevent the breakdown of the sovereign-debt market. Spiegel (1996) considered a three-way debt reduction deal between a sovereign debtor, a group of commercial banks, and an official creditor, which also insures the deposits of the banks. In this model, the official creditor's motivation for taking part in debt reduction is to avoid losses of publicly financed deposit insurance funds. Diwan and Rodrik (1992) analyzed a model in which the IFI comparative advantage in enforcing conditionality enhances the value of the three-way debt-reduction agreement. Their conclusion is similar to the results obtained in Section 4 of the present study.

This paper is organized as follows. Section 2 introduces a model of recurrent debt-rescheduling bargaining over the surplus, based on the gains from trade in differentiated goods between the debtor country and the rest of the world. Section 3 characterizes the three-way bargaining framework representing the structure of debt-rescheduling negotiations prior to the implementation of the Brady plan. Section 4 contrasts the results of the previous section with a sequential bargaining framework that captures the important features of the IFI-mediated debt-rescheduling negotiation under the Brady plan. Section 5 sums up the discussion, and suggests routes for subsequent research.

2. The model

2.1. Preferences, technology and trade

Assume that the world economy is endowed with a continuum of differentiated-good technologies, all characterized by the same constant marginal cost. The total set of these technologies has measure of 1. Each technology is owned by a single monopolistic supplier who employs it every period to produce a corresponding variety of the differentiated good. A fraction α ($\alpha < 1/2$) of varieties of the differentiated good is produced in a small developing country while the rest is produced in the 'rest of the world' (ROW). Each period, the country (the ROW) is also endowed with Z_D (Z_R) units of a numeraire good which is costless to trade. (The quantities specific to the country and the ROW are denoted by subscripts D and R.)

Following Grossman and Helpman (1996), this paper considers a specification of preferences which ensures that the market for each differentiated product can be analyzed using partial equilibrium techniques while residual trade in the numeraire good guarantees overall trade balance for the country and the ROW. Specifically, the country and the ROW are populated by identical individuals who have the following utility:

$$U_i = x_0 + \frac{\theta}{\theta - 1} X_i^{\frac{\theta-1}{\theta}}, \ \theta > 1, \quad i = D, R \tag{1}$$

where x_0 is consumption of the numeraire good and X_i is a composite commodity denoting consumption of imported differentiated products. Since the country's and the ROW's residents are assumed to consume only the numeraire good and the imported varieties of the differentiated good, the consumption indices for the country and the ROW are given by:

$$X_D = \left[\int_0^{1-\alpha} (x(j))^{\frac{\epsilon-1}{\epsilon}} \mathrm{d}j \right]^{\frac{\epsilon}{\epsilon-1}} \quad \text{and} \quad X_R = \left[\int_{1-\alpha}^{1} (x(j))^{\frac{\epsilon-1}{\epsilon}} \mathrm{d}j \right]^{\frac{\epsilon}{\epsilon-1}}, \tag{2}$$

$\epsilon > \theta > 1$.[12]

There are two factors affecting trade dependency of the country on the ROW (and vice versa) in this framework. One factor is the elasticity of substitution between the numeraire good and the composite commodity consisting of imported differentiated products. A low θ implies a low elasticity which corresponds to greater trade dependency. Another factor of trade dependency is the range of varieties produced abroad, since the domestic residents consume only imported varieties. Therefore, the smaller the range of the differentiated products produced in the ROW $(1-\alpha)$, the less is the country's dependency on imports from the ROW.

If the country has debt and the government decides to service it, the country has to run a trade surplus and make net transfers of the numeraire good. The endowments of the numeraire good (i.e., the reserves) are large enough to ensure that, in equilibrium, citizens of both the country and the ROW consume large positive amounts of this good. This assumption ensures that the marginal utility of income is fixed and that transfers between the country and the ROW do not affect the consumption of differentiated products.

[12] If the consumers 'loved' all varieties of the differentiated good (i.e., domestic and imported) there would be competition between domestic and foreign producers in both markets. Therefore, the default-related trade cost will have ambiguous effect on the producers' profits and on welfare. While the profits from exports decline as the trade cost increases, the opposite happens with the profits from domestic sales, i.e., they increase. One way to avoid this ambiguity is to assume that consumers see varieties imported from abroad as distinct from domestic varieties, i.e., to impose the Armington assumption. If foreign varieties substitute more closely for the numeraire than for the domestic varieties, then an increase in the trade cost might have only small effect on the profits of domestic firms from domestic sales. Another way to avoid the ambiguous effect of the trade cost on welfare is to assume that consumers are interested only in imported differentiated products so that domestic producers earn profits only on foreign sales. While this simplification is rather severe in terms of the representation of market structure, it allows this paper to focus on the effect of the default penalties on consumers' access to the foreign-made differentiated products.

Since a detailed discussion of the national welfare function in a similar intraindustry trade framework is presented in Grossman and Helpman (1996), we will only briefly characterize the main elements of the country's and ROW's welfare. Solving the consumers' utility maximization problem generates identical constant elasticity demand functions for each differentiated product. Therefore, all producers mark up prices over marginal costs by the same factor. Since all producers have the same marginal cost, all varieties have the same price.

Trade is costly even without default sanctions. As in Samuelson (1954) and other more recent work on trade in differentiated products, trade costs are of an 'iceberg' type: a fraction $1-1/\tau$ ($\tau>1$) of every good shipped between the debtor country and the ROW 'melts' en-route before the good arrives to its destination. This increases the price of an imported variety by a factor of τ. Consequently, the gross profits of producers located in the debtor country and in the ROW are given by:

$$\pi_D(j)=\frac{1}{\epsilon}\alpha^{\frac{\epsilon-\theta}{1-\epsilon}}\tau^{1-\theta} \quad \text{and} \quad \pi_R(j)=\frac{1}{\epsilon}(1-\alpha)^{\frac{\epsilon-\theta}{1-\epsilon}}\tau^{1-\theta}. \tag{3}$$

The indirect utility of a citizen with income E in the debtor country and the ROW is given by the sum of this income and consumer surplus:

$$\begin{aligned} V_D(j)&=E+\frac{1}{\theta-1}(1-\alpha)^{\frac{1-\theta}{1-\epsilon}}\tau^{1-\theta} \quad \text{and}\\ V_R(j)&=E+\frac{1}{\theta-1}\alpha^{\frac{1-\theta}{1-\epsilon}}\tau^{1-\theta}. \end{aligned} \tag{4}$$

National welfare is determined by integrating individuals' indirect utilities over the population. To simplify the model and to concentrate on degrees of diversification of the economies rather than their sizes, this paper assumes that the population measure is equal to one in both the country and the ROW.

Aggregate income is the sum of the endowment of the numeraire and the profits earned by the firms. The profits of the ROW commercial banks that hold claims on the country are assumed to have a negligible weight in the IFI-maximized welfare of the ROW citizens. Therefore the welfare function for the country and the IFI-maximized welfare function for the ROW can be expressed as

$$\begin{aligned} W_D&=Z_D+\alpha\frac{1}{\epsilon}\alpha^{\frac{\epsilon-\theta}{1-\epsilon}}\tau^{1-\theta}+\frac{1}{\theta-1}(1-\alpha)^{\frac{1-\theta}{1-\epsilon}}\tau^{1-\theta}\\ &=Z_D+\left[\frac{1}{\epsilon}\alpha^{\frac{1-\theta}{1-\epsilon}}+\frac{1}{\theta-1}(1-\alpha)^{\frac{1-\theta}{1-\epsilon}}\right]\tau^{1-\theta}, \end{aligned} \tag{5}$$

$$\begin{aligned} W_R&=Z_R+(1-\alpha)\frac{1}{\epsilon}(1-\alpha)^{\frac{\epsilon-\theta}{1-\epsilon}}\tau^{1-\theta}+\frac{1}{\theta-1}\alpha^{\frac{1-\theta}{1-\epsilon}}\tau^{1-\theta}\\ &=Z_R+\left[\frac{1}{\epsilon}(1-\alpha)^{\frac{1-\theta}{1-\epsilon}}+\frac{1}{\theta-1}\alpha^{\frac{1-\theta}{1-\epsilon}}\right]\tau^{1-\theta}. \end{aligned} \tag{5'}$$

The assumption that $\epsilon > \theta$ implies that different varieties are better substitutes for one another than they are for the numeraire good. This ensures that consumer surplus holds a larger weight in the aggregate utility than the producer surplus, i.e., $1/\epsilon < 1/(\theta - 1)$. An implication of this assumption is that trade has greater importance as a source of foreign differentiated products than as a means of expanding the market for home-made differentiated products. Therefore, when the trade cost increases, a country that imports a wider range of differentiated products experiences larger welfare loss than a country that imports only a few varieties.

2.2. Objectives of a debtor country's government, the commercial creditors, and the IFIs

A debtor country's government is assumed to maximize the country citizens' welfare given by $\Psi^t = \Sigma_{i=0}^{\infty} W_D^{t+i}/(1+\delta)^i$ where δ $(0 < \delta < 1)$ is the country's discount rate and W_D^{t+i} is the country's welfare in period $t+i$. Since a typical highly indebted nation is capital-poor, undiversified, and shut off from the world capital market for lack of creditworthiness, we assume that the country's rate of time preference is greater than the world interest rate r, i.e., $r < \delta$. Therefore, in the initial period the country will borrow on the world capital market as much as it can.

The ROW's interests are represented by the IFIs,[13] which act as a single entity. The IFIs maximize the welfare of the citizens of the ROW defined by $\Lambda^t = \Sigma_{i=0}^{\infty} W_R^{t+i}/(1+r)^i$ where the IFI discount rate is equal to the world interest rate and W_R^{t+i} is the ROW's welfare in period $t+i$.

This model assumes that a large number of banks from the ROW are competing to lend to the country. The banks are willing to lend money as long as they anticipate receiving their reservation value, which equals the world market rate of return. Furthermore, a set of assumptions is adopted in order to prevent the country from coalescing with new creditors against existing ones, or with one subset of existing creditors against another. Specifically, the debt contracts are assumed to include a cross-default clause and a negative seniority (i.e., *pari passu*) clause. The cross-default clause ensures that after the loans are disbursed the country has to deal with the banks as a unified entity, i.e., as a banking consortium.[14] The

[13]To be more precise, the IFIs represent the interests of their major shareholder countries' citizens. The debtor country is assumed to hold only a small share in the IFI equity and its interests do not affect the preferences of the IFIs.

[14]Bondholders and banks are sometimes represented by bondholders' or steering committees governed by majority voting rules. Such rules prevent dissenting creditors from holding up the debt-rescheduling negotiation (see Eichengreen and Portes, 1995). Syndicated loans often include non-discriminatory clauses which commit the debtor country not to extend more favorable treatment to dissenting creditors.

negative seniority clause guarantees that all bank claims are *equal* in their seniority. This assumption is sufficient to prevent new banks from stepping in when the country is negotiating a rescheduling of the old debt. Therefore the country will not be able to rollover its arrears by borrowing from another bank or banking consortium. Jointly the two clauses ensure that the relationship between the original consortium and the country is that of a bilateral monopoly (see Bulow and Rogoff, 1989a).

2.3. Bilateral debt-rescheduling negotiations

Since all cross-border debt contracts are valid in the ROW courts, banks can use the ROW legal system to invoke penalties on the debtor country if it defaults.[15] While these penalties do not benefit the creditors directly, they result in higher costs of trade between the debtor and the ROW: kt, where $k>1$.[16] Therefore, the introduction of default penalties inflicts on the sovereign debtor the welfare loss defined by

$$\Delta W_D = \left[\frac{1}{\epsilon}\alpha^{\frac{1-\theta}{1-\epsilon}} + \frac{1}{\theta-1}(1-\alpha)^{\frac{1-\theta}{1-\epsilon}}\right](1-k^{1-\theta})\tau^{1-\theta}. \tag{6}$$

But the sanctions triggered by the creditors also harm citizens of the ROW who experience the welfare loss defined by:

$$\Delta W_R = \left[\frac{1}{\epsilon}(1-\alpha)^{\frac{1-\theta}{1-\epsilon}} + \frac{1}{\theta-1}\alpha^{\frac{1-\theta}{1-\epsilon}}\right](1-k^{1-\theta})\tau^{1-\theta}. \tag{6'}$$

Since the country's welfare loss caused by sanctions does not accrue as a benefit to the banks, the default is inefficient and the two sides can reach a debt-rescheduling agreement that allows the country to trade freely in exchange for a

[15]The US Foreign Sovereign Immunities Act of 1976 exempted commercial activities of foreign governments from sovereign immunity. This exemption includes sovereign borrowing. Besides, most sovereign debt contracts contain explicit waivers of sovereign immunity.

[16]The debtor nation may not be able to transact freely with the creditor's home country. For example, short-term trade credits such as bankers' acceptances and letters of credit may be denied to the debtor country. The debtor country exporters' revenues may be subject to seizures. The country will have to disguise its exports to keep creditors from seizing them and must pay for its imports with cash when trade-credit lines are cut. See Bulow and Rogoff (1989a) and Cline (1995) for more details on the effect of default penalties on the debtor country trade. See Fernández and Özler (1999) for a bargaining model that endogenizes the penalty which is imposed on the debtor country if it defaults.

share of its welfare gains from avoiding the default.[17] The equilibrium agreement will be defined by the country's bargaining power vis-à-vis the banks and its potential welfare loss due to the default penalties.

In order to analyze the effect of delay caused by different IFI policies on the relative bargaining power of the parties, this paper formalizes debt-rescheduling negotiations along the lines of the alternating offers framework (see Rubinstein, 1982) with non-zero time intervals between bargaining counteroffers.[18] In this framework, the party that initiates the negotiation by making the first proposal has an advantage. As noted in Section 3, in the three-way bargaining framework, assigning the proposal-making advantage to the IFIs is consistent with their special role in sovereign-debt negotiations. However, there is no historical or institutional justification for giving this advantage to either the country or its creditors in the bilateral negotiations between them.[19] Therefore, it is assumed that in bilateral negotiations every round begins with a move of Nature that randomly chooses the proposer with equal probabilities. If the first proposal is not accepted, then the party that made it is as likely to make a new proposal in the next round as the other negotiating party. If a rescheduling agreement is reached in period t, then the country can freely trade as long as it complies with the agreed repayment schedule. However, the country cannot commit itself to any repayment schedule and in period $t+1$ again threatens to default. Therefore, even if there is an agreement in period t, in period $t+1$ the rescheduling negotiations will start over again with Nature selecting the first proposer (see Fig. 1).

The assumption that a proposer is selected randomly does not affect the

[17]In the debt-rescheduling model considered by Bulow and Rogoff (1989a) the sides are bargaining over the gross value of the country's tradable output rather than just its part determined by potential welfare loss from the default penalties. The reason for this is that in the 'bargaining region' of the Bulow–Rogoff model, neither autarky nor trade subject to sanctions are credible (i.e., subgame perfect) threat strategies for the country. Our interpretation of the surplus divided between the country and its creditors is closer to the one adopted by Wells (1993) who viewed debt-rescheduling negotiations as bargaining over the price of a periodic lien that the creditors hold against the country's welfare gains. The salvage value of the lien to the creditors is zero because they do not benefit directly from the trade penalties against the country. The termination value of the lien to the country is defined by Eq. (6). Therefore the sale of the lien is efficient and the equilibrium price should be in the interval between zero and the value given by Eq. (6).

[18]The distributional implications of the bargaining regime, which the parties use to arrive to an agreement, is lost in the continuous-time framework, i.e., when the time interval between bargaining counteroffers converges to zero. This is the main reason why this paper adopts the discrete-time approach with time-consuming bargaining.

[19]Aggarwal's (1996) thorough account of the 61 incidences of international debt rescheduling that have occurred since 1820 does not offer any evidence of a consistent pattern of either of the creditors' or the sovereign debtors' advantage in setting the agenda or initiating the renegotiation of debt repayment. There were instances in which the debtor countries started rescheduling negotiations and other instances in which the creditors initiated those negotiations in anticipation of defaults by the debtors.

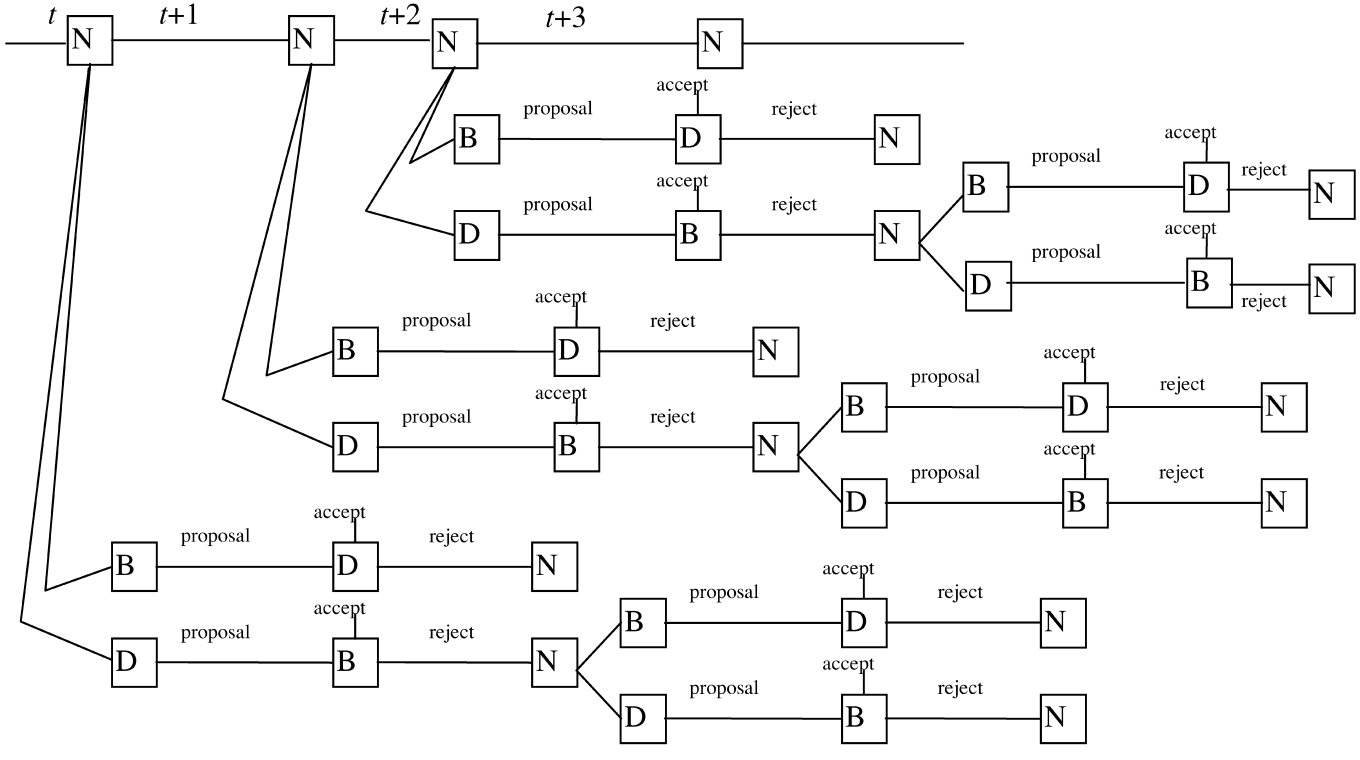

Fig. 1. Bilateral negotiations between the banks (B) and the debtor country (D).

Rubinstein-style outcome of a bilateral rescheduling negotiation. When both sides are impatient to reach an agreement and the country can seek new terms of debt repayment every period, there exists a unique subgame perfect equilibrium which is stationary and in which an immediate rescheduling agreement is reached at the start of every renegotiation subgame.[20] It is never a part of the country's equilibrium strategy to resort to accumulating its output in storage in order to hold out for a better deal. This is because next period, the country can always renegotiate the terms of repayment without delaying the gains from trading freely in the current output of the differentiated products. Therefore the country's gains from avoiding the penalties (6) are divided efficiently every period.[21]

It is easy to show that the equilibrium shares of the banks and the debtor country in the discounted flow of the country's gains from default-free trade are $X_{BB} = \delta(1+2r)/(\delta + r + 2\delta r)$ and $X_{BD} = r/(\delta + r + 2\delta r)$ if the banks make the first proposal and $X_{DB} = \delta/(\delta + r + 2\delta r)$ and $X_{DD} = r(1+2\delta)/(\delta + r + 2\delta r)$ if the debtor country makes the first proposal.[22] As in Rubinstein (1982), the more impatient the parties are in reaching a settlement (i.e., the higher δ and r are), the smaller their shares.

Thus, at equilibrium, the country will export all its output every period and will make per period expected repayments defined by

$$\boldsymbol{R}_t \frac{\delta(1+r)(1-k^{1-\theta})\tau^{1-\theta}}{\delta + r + 2\delta r}\left[\frac{1}{\epsilon}\alpha^{\frac{1-\theta}{1-\epsilon}} + \frac{1}{\theta - 1}(1-\alpha)^{\frac{1-\theta}{1-\epsilon}}\right].$$

Therefore, the country's expected lending ceiling is set at

$$\boldsymbol{R}_t \frac{\delta(1+r)(1-k^{1-\theta})\tau^{1-\theta}}{(\delta + r + 2\delta r)r}\left[\frac{1}{\epsilon}\alpha^{\frac{1-\theta}{1-\epsilon}} + \frac{1}{\theta - 1}(1-\alpha)^{\frac{1-\theta}{1-\epsilon}}\right] \tag{7}$$

In line with previous analyses of sovereign borrowing and default (e.g., Eaton and Gersovitz, 1981; Cohen and Sachs, 1986), more painful penalties (i.e., in our case, the penalties resulting in higher trade cost, $k\tau$) will harm the country's threat point and induce it to make larger debt repayments. This allows the country to borrow more from foreign creditors. Since the default penalties affect the country's ability to trade with the ROW, the country is more vulnerable to these penalties when its

[20] As in constant-recontracting model considered by Bulow and Rogoff (1989a), the penalties are never implemented in equilibrium. However, this result depends on the information structure of the model. Eaton and Engers (1999) present a model suggesting that in incomplete information framework the creditor may actually have to implement the sanctions in equilibrium.

[21] Chang (1995) considers an alternating-offers framework in which the equilibrium outcome is affected not only by the country's and the creditors' rates of impatience but also by the expectations of the country's private sector which determines the evolution of resources available for debt repayment. His model has a multiplicity of bargaining outcomes, some of which include inefficient delays.

[22] The expected shares of the banks and the country before Nature selects which of these parties makes the first proposal are given by: $\bar{X}''_B = \delta(1+r)/(\delta + r + 2\delta r)$ and $\bar{X}''_D = \delta(1+r)/(\delta + r + 2\delta r)$.

economy is more dependent on trade in general (i.e., when θ is low) and on imports of a wider range of foreign differentiated products in particular (i.e., when $1-\alpha$ is high). Therefore, when debt rescheduling negotiation is bilateral, countries with more open and relatively less diversified economies are more creditworthy; hence, they should be able to borrow more from private foreign creditors. This conclusion is consistent with the existence of a large group of highly indebted developing countries with undiversified economies specializing in exports of a few homogeneous commodities, such as oil and other raw materials, and importing a wide range of differentiated goods. However, a different framework is needed to explain large debts of developing countries with relatively diversified open economies. Such a framework is described in the next section.

3. Debt-rescheduling negotiations with participation of the IFIs

Default penalties against the debtor country create a negative externality for the ROW. This externality may prompt the IFIs that represent the ROW to enter into negotiations between the country and its creditors. In this case, debt-rescheduling negotiations turn into three-way bargaining over the worldwide gains from trade that can be achieved by averting default: $\Delta W = \Delta W_D + \Delta W_R$. Depending on the IFI relative bargaining power in the three-way negotiation, the country and its creditors may be able to extract some of the ROW's own gains from default-free trade in the form of transfers from the IFIs. The bargaining outcome is determined by the parties' rates of impatience and the value of the total surplus to be divided in three-way negotiation. This section investigates the conditions under which the debtor country and its private creditors benefit from the IFI entry into the rescheduling process, and how the outcome of the multilateral rescheduling process depends on the degree of complementarity between the country's and the ROW's economies.

Previous analyses have emphasized that IFI participation in debt-rescheduling negotiations can ossify the bargaining positions of the country and its creditors, resulting in additional delay in reaching an agreement. In bargaining frameworks with incomplete information, this delay occurs when the country and its creditors expect IFI transfers, and engage in bargaining over the terms of their conditionality (see Wells, 1993). Although in the complete-information bargaining framework employed here, the equilibrium agreement is reached immediately, there is an effect of *potential* additional delay on the relative bargaining power of the parties if formulation of counterproposals takes time. This bargaining-power effect is sensitive to the timing and conditionality of the IFI transfers to the other parties in negotiations.

As noted in Section 1, the negotiation regime that existed prior to the implementation of the Brady plan required unanimous consent of all involved parties before the adoption of a debt-rescheduling bargain. We associate this

regime with the dynamic bargaining game in which the IFIs make the first proposal on sharing the worldwide gains from avoiding a default.[23] If the IFI proposal in the beginning of negotiation is not accepted unanimously, at the next stage of negotiation all parties are equally likely to put forth a new proposal. Since the country and its creditors are equally likely to propose at all stages in both the bilateral and the three-way frameworks, any change in the bargaining power of the country vis-à-vis the banks after the entry of the IFIs, is due to the timing and conditionality of the IFI proposal rather than the proposal-making advantage of either the country or the banks in the protocol-sensitive framework. Fig. 2 illustrates the sequence of moves in multilateral negotiations with unanimity of agreement.

In alternating-offers bargaining games with more than two players, any division of a surplus can be supported as an equilibrium by infinitely nested punishment strategies, if the players are sufficiently patient. To refine the set of equilibria, this paper focuses on the concept of stationary subgame perfect equilibrium which yields the unique solution.[24]

To determine the equilibrium outcome, our first step is to calculate the continuation values of the stationary strategies starting from the *second stage* of negotiation, i.e., when all the parties have equal probability of making a proposal. Since for subgames beginning with the move of Nature, the set of players that may be selected to make a proposal and the strategy sets of these players are the same, all of these subgames are structurally equivalent (see Baron and Ferejohn, 1989). Therefore, to find the equilibrium we have to solve the following system of equations:

$$\begin{cases} V_I = \frac{1}{3}\left[\Delta W - \frac{1}{1+\delta}V_D - \frac{1}{1+r}V_B\right] + \frac{2}{3}\frac{1}{1+r}V_I \\ V_B = \frac{1}{3}\left[\Delta W - \frac{1}{1+\delta}V_D - \frac{1}{1+r}V_I\right] + \frac{2}{3}\frac{1}{1+r}V_B \\ V_D = \frac{1}{3}\left[\Delta W - \frac{1}{1+r}V_I - \frac{1}{1+r}V_B\right] + \frac{2}{3}\frac{1}{1+\delta}V_D \end{cases} \tag{8}$$

[23]The assumption of the IFI advantage to make the first proposal after its entry into negotiation can be justified for two reasons. First, multilateral institutions have certain agenda-setting privileges based on their comparative advantage in gathering information on and monitoring of policies in debtor countries and in enforcing conditionality (see Claessens and Diwan, 1990). Second, some of the agenda-setting advantages of the IFIs can be justified by the public-good nature of their main output, i.e., information on the state of the economies in debtor countries. The multilateral nature of the IFIs allows them to internalize external benefits from providing such information (see Rodrik, 1995).

[24]The concept of stationarity is often used to refine solutions in games with multiple equilibria. Solutions based on stationarity subgame perfect equilibrium are analytically tractable and in many aspects focal in the set of subgame perfect equilibria. Stationarity is used as a refinement of the set of equilibria in sequential bargaining models considered by Chatterjee et al. (1993) and Baron and Ferejohn (1989).

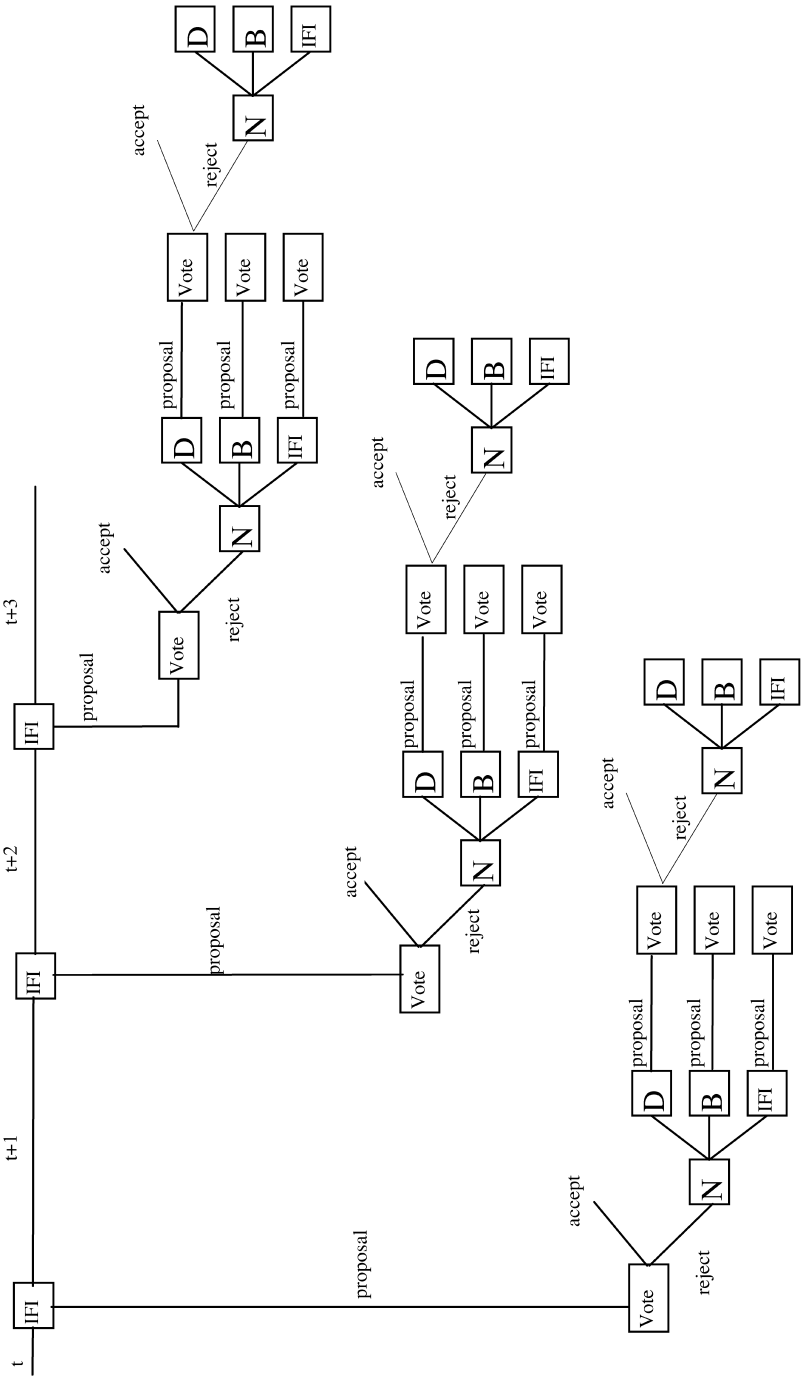

Fig. 2. Multilateral negotiations.

where V_I, V_B, V_D are the stationary continuation values for the strategies of the IFIs, the banks and the country. Since the agreement requires the unanimous consent of all parties, each of them will agree with the proposed division of the surplus if its share is at least as great as the value of vetoing the proposal and moving the game into the next structurally equivalent subgame.[25] Solving the system, one obtains the following continuation values of the stationary strategies beginning at stage two:

$$\begin{cases} V_I = \dfrac{\delta(1+r)}{\delta + r + \delta + 3r\delta}\,\Delta W \\ V_B = \dfrac{\delta(1+r)}{\delta + r + \delta + 3r\delta}\,\Delta W \\ V_D = \dfrac{r(1+\delta)}{\delta + r + \delta + 3r\delta}\,\Delta W \end{cases} \tag{9}$$

Therefore, at the first stage, the IFI proposal is accepted by the country and the banks if they are offered the shares defined by

$$X_{IB}''' = \frac{\delta}{\delta + r + \delta + 3r\delta}\,\Delta W, \quad X_{ID}''' = \frac{r}{\delta + r + \delta + 3r\delta}\,\Delta W. \tag{10}$$

Then the IFI share in its own proposal is given by

$$X_{II}''' = \Delta W - X_{ID} - X_{IB} = \frac{\delta(1+3r)}{\delta + r + \delta + 3r\delta}\,\Delta W. \tag{11}$$

As in Rubinstein (1982), the agreement is reached in the first stage and each party's share depends inversely on its rate of impatience. However, when bargaining involves time delays between counteroffers, the potential additional delay in negotiations due to the participation of the IFIs is more damaging for the bargaining power of the more impatient party, i.e., the debtor country.[26]

Like earlier models of IFI-mediated sovereign-debt rescheduling (e.g., Bhattacharya and Detragiache, 1994), this paper assumes that the IFI decision to participate in the rescheduling negotiation is determined by exogenous political-economy

[25] The IFIs, the banks and the country will accept any proposal in which they are offered at least $V_I/(1+r)$, $V_B/(1+r)$, $V_D/(1+\delta)$. Since the right to propose an agreement is valuable, each side will realize the proposal-making advantage by offering to the other sides the shares that are just acceptable to them. Therefore, in the top equation of the system (8) the IFIs, which make the proposal at the second stage of the negotiation with probability 1/3, get ΔW minus the shares offered to the banks, $V_B/(1+r)$, and to the country, $V_D/(1+\delta)$. With probability 2/3, the IFIs do not get a chance to make a proposal at this stage. In this case, they accept the share offered to them by the other parties, i.e., $V_I/(1+r)$. The same logic applies to other equations in (8).

[26] Under bilateral bargaining, the parties split the surplus in the proportion given by $\bar{X}_B''/\bar{X}_D = \delta(1+r)/r(1+\delta)$. Therefore the banks get a greater expected share if they are more patient (i.e., $\delta > r$): $\bar{X}_B''/\bar{X}_D'' > 1$. Under three-way bargaining beginning with the IFI proposal, the share of the banks (i.e., the more patient party) gets even larger relative to the country's share, i.e., $\bar{X}_B''/\bar{X}_D'' = \delta(1+r)/r(1+\delta) < \delta/r = X_{IB}'''/X_{ID}'''$. Therefore, the third party's presence further weakens the bargaining power of the more impatient party (i.e., the debtor country) relative to that of the less impatient party (i.e., the banks).

factors.[27] Once the IFIs become a party in the rescheduling negotiations, they bargain strategically over the amount of transfers they have to make in the three-way deal. In equilibrium, the total amount of transfers from the IFIs to the banks and the country is defined by the relative impatience of the negotiating parties and the ROW's gains from averting the country's default. Formally, the total transfers from the IFIs under the unanimity agreement regime are denoted by A^U and defined by

$$\begin{aligned} A^U &= \Delta W_R - \frac{\delta + 3r\delta}{\delta + r + \delta + 3r\delta}\,\Delta W \\ &= \frac{\delta + r}{\delta + r + \delta + 3r\delta}\,\Delta W_R - \frac{\delta + 3r\delta}{\delta + r + \delta + 3r\delta}\,\Delta W_D. \end{aligned} \tag{12}$$

Since in this model the IFI transfers are financed from the ROW's trade gains from avoiding the country's default, the total amount of these transfers will be larger if the debtor is an important trade partner for the ROW. This importance is greater if the ROW's consumers derive greater value from access to differentiated products manufactured in the debtor country (i.e., θ is lower) and the debtor's economy is more diversified (i.e., α is higher).

The payoffs to the banks and the debtor country from the IFI participation in the rescheduling process are defined by the relative impatience of the parties and the size of the three-way surplus to be divided in negotiation. Denoting the payoffs to the banks and to the country by β and γ, we have

$$\beta = X'''_{IB} - \bar{X}''_B = \frac{\delta}{r + 2\delta + 3r\delta}\,\Delta W - \frac{\delta(1 + r)}{\delta + r + 2r\delta}\,\Delta W_D \tag{13}$$

and

$$\gamma = X'''_{ID} - \bar{X}''_D = \frac{r}{r + 2\delta + 3r\delta}\,\Delta W - \frac{r(1 + \delta)}{\delta + r + 2r\delta}\,\Delta W_D. \tag{13'}$$

Interestingly, the banks prefer the three-way negotiation under any positive

[27] Strictly speaking, the question whether the gains from trade are divided in three-way or bilateral negotiation is determined by the outcome of a non-cooperative coalitional bargaining game with transferable utility. Chatterjee et al. (1993) describes the conditions under which the grand coalition (i.e., the three-way bargaining) emerges as an equilibrium outcome in such framework. If the IFI conditionality helps to create additional welfare gains (as in Diwan and Rodrik, 1992), then the total welfare gains to be divided in three-way negotiation is $\Delta W_R + \Delta W_D + \Delta W_C$ where the last term reflects the gains from the implementation of the IFI-supervised adjustment program in the debtor country. Using the results from Chatterjee et al. (1993), it can be shown that the IFI-inclusive debt-rescheduling agreement always emerges as the equilibrium if the gains from conditionality, ΔW_C, are sufficiently large.

transfers (i.e., $\beta > 0$ whenever $A^U > 0$) because their bargaining-power advantage ensures that they capture a greater share of the IFI transfers. Moreover, the IFI participation further increases the banks' bargaining power relative to the country and allows them to capture a greater share of the original bilateral surplus. The country benefits from the IFI participation in the rescheduling process only if the IFI transfers reach a substantial amount (i.e., $\gamma > 0$ only when the transfers, A^U, exceed some value $A' > 0$). When the transfers are insufficient (i.e., $A^U < A'$), the country does not receive enough compensation for the increased debt-servicing payments it must make to the banks under the three-way bargaining. In this case, the IFI participation leads to a bail out that benefits the banks but harms the country.[28] Since the IFI transfers are an increasing function of the ROW's gains from default-free trade with the country, ΔW_R, debtor countries that are less valued as trade partners in the ROW are less likely to benefit from the multilateral rescheduling process.

Eqs. (6), (6′), (13) and (13′) suggest that the payoffs to the banks and the country from the IFI participation in the negotiation increase with the share of differentiated products manufactured in the country, α. The banks' greater bargaining power ensures that their payoff exceeds the country's payoff for any level of the country's economic diversification. However, both payoff functions $\beta(\alpha)$ and $\gamma(\alpha)$ turn positive only when α becomes sufficiently large. This demonstrates that IFI participation in the rescheduling process benefits the country and the banks only if the country's economy is sufficiently diversified. For example, in a case in which $\theta = 3$, $\epsilon = 4$, $r = 0.1$, $\delta = 0.15$, $\tau = 1.15$ and $k = 1.15$, the country can benefit from the IFI participation only if it supplies at least 32% of differentiated product varieties in the world market. When $\alpha \geq 0.32$, trade with the country gives the ROW a large enough welfare benefit to make the IFIs willing to compensate the country for deterioration of its bargaining position under the three-way negotiation. However, even countries with poorly diversified economies that produce only a narrow range of varieties, α, can benefit from the participation

[28]Because in the discrete time framework, introducing a third party into a negotiation further weakens the bargaining power of the country relative to the banks, our results suggest a qualification for Bulow and Rogoff's (1988) conclusion that if the official creditors make positive transfers to the country, then both the banks and the country gain from their participation in the negotiation. Since the country is expected to make relatively larger payments to the banks in a three-way deal, its credit ceiling increases even if it is anticipated that the IFIs will participate with no transfers. The unanticipated participation of the IFIs in the rescheduling negotiations benefits primarily the banks because they absorb most of the IFI transfers to the debtor country through larger debt repayments. The present model points to a theoretical possibility that as a result of the IFI participation the country makes positive transfers not only to the banks but also to the IFIs. This possibility corresponds to the case in which the total IFI transfers are negative, i.e., $A^U < 0$. In what follows, the focus of the paper is on the IFI involvement in the rescheduling process that was not anticipated by the sides.

of the IFIs when imported differentiated products are essential for the ROW's consumption. This is the case when the numeraire good does not substitute sufficiently closely for the group of imported differentiated products (i.e., when θ is low). In our numerical example, the reduction of θ from 3 to 1.15 increases the ROW's dependency on trade with the debtor country and lowers the minimal level of economic diversification at which the country can have non-negative payoff from the IFI intermediation in the rescheduling negotiation from 32 to 2%.

The results obtained in this section can be contrasted with the results in Section 2 of this paper and the existing literature, which links the debtor country's creditworthiness to the extent of gains that the debtor country derives from international trade (e.g., Aizenman, 1991; Diwan, 1990). This section shows that when trade dependency between the debtor country and the ROW is mutual, another important factor affects the debtor country's creditworthiness. In the context of intra-industry trade, this factor is the extent of diversification of the country's economy relative to the ROW. A broader range of differentiated products manufactured in the country and a greater importance of these products in the consumption of the ROW's citizens make the ROW more dependent on trade with it. This reduces the static bargaining power of the international institutions representing the ROW by increasing the damage done to the ROW's citizens if negotiation breaks down (defined by (6′)). This damage increases the total surplus over which the three parties bargain in the dynamic bargaining framework considered here. Therefore, the terms of debt rescheduling can improve with the country's economic diversification for both the banks and the country, but at the expense of the third party in negotiation, i.e., the IFIs. Thus, in the framework with two-way trade in differentiated products, trade dependency measured by the degree of substitutability between domestic and foreign goods not only weakens the country's bargaining power in bilateral negotiations with the banks, but also enhances the bargaining power of these two parties vis-à-vis the IFIs. The latter then are induced to make greater ex-post transfers increasing the country's creditworthiness.

4. Effect of IFI policies on sovereign-debt renegotiation after the introduction of the Brady plan

Changes in IFI policies introduced under the Brady plan and new policy proposals for IFI-supervised sovereign bankruptcy procedures require a bargaining model that can represent the new role of the IFIs in the rescheduling process. Before implementation of the Brady plan, a combination of the IFI policies of concerted lending, conditionality and no lending to countries in arrears with private creditors, defined the consensual nature of the multilateral rescheduling process. Each agreement had to be based on the unanimous consent of all involved

parties, because their individual strategies toward debt reduction were conditioned on each other in such a way that there could be either a consensual three-way agreement or no agreement at all. Each party could hold up the entire bargain. The Brady plan changed the process by allowing the IFIs to reach a final agreement through a sequence of bilateral deals with the country and the banks. Although the process remains multilateral in that the overall agreement divides the surplus among the three parties, the official lending policy is to a certain extent separated from negotiation on rescheduling the country's debts to commercial creditors.

To analyze the effect of these changes on the outcome of the rescheduling process, this section adopts a formal framework in which the final agreement in the multilateral negotiation can be achieved through a sequence of partial bilateral agreements between the parties, rather than by unanimous three-way agreement. As in the previous section, each negotiating party is equally likely to be selected to make a proposal at each stage of the game except for the very first stage when only the IFIs can make a proposal. Following a proposal on division of the surplus, the parties that agree with the shares offered to them receive these shares immediately and exit from the game. The exit of these parties from the game can also be interpreted as an agreement to sell to the proposer the right to represent the exiting parties in future negotiations with the remaining parties in exchange for a share of the surplus. The parties (or party) that disagreed with the proposal and the proposer continue bargaining over the remaining share of the surplus.[29] Next period a new proposer is selected by a random draw among the remaining players. The game continues until all parties exit from the game and all the gains from default-free trade are divided. Fig. 3 presents the model in the form of a game tree.

The IFI concessionary loans disbursed to a debtor country with arrears in exchange for the promise to implement structural reforms can be viewed as one example of such partial agreement. Another example of a bilateral partial deal is the agreement between the banks and the IFIs on the amount of official enhancements for the conversion-bond collateral. Finally, to the extent that the bankruptcy reorganization approach to sovereign debt restructuring is implemented by strengthening the roles of the IMF conditionality and lending into arrears, the sovereign bankruptcy procedure that may be introduced in the future international

[29]Since the gains from default-free trade are realized only after the overall agreement is reached, there is no surplus to be divided at the time of partial agreements. However, we can assume that the proposer pays the amount accepted under the partial agreement by borrowing at no cost outside the game. The borrowed amount becomes the joint liability of the parties that continue to bargain until final agreement is reached and the gains from trade are realized (see Krishna and Serrano, 1996). Such interpretation is convenient for games in which the bargaining is over a 'pie' that does not physically exist until all parties reach an agreement.

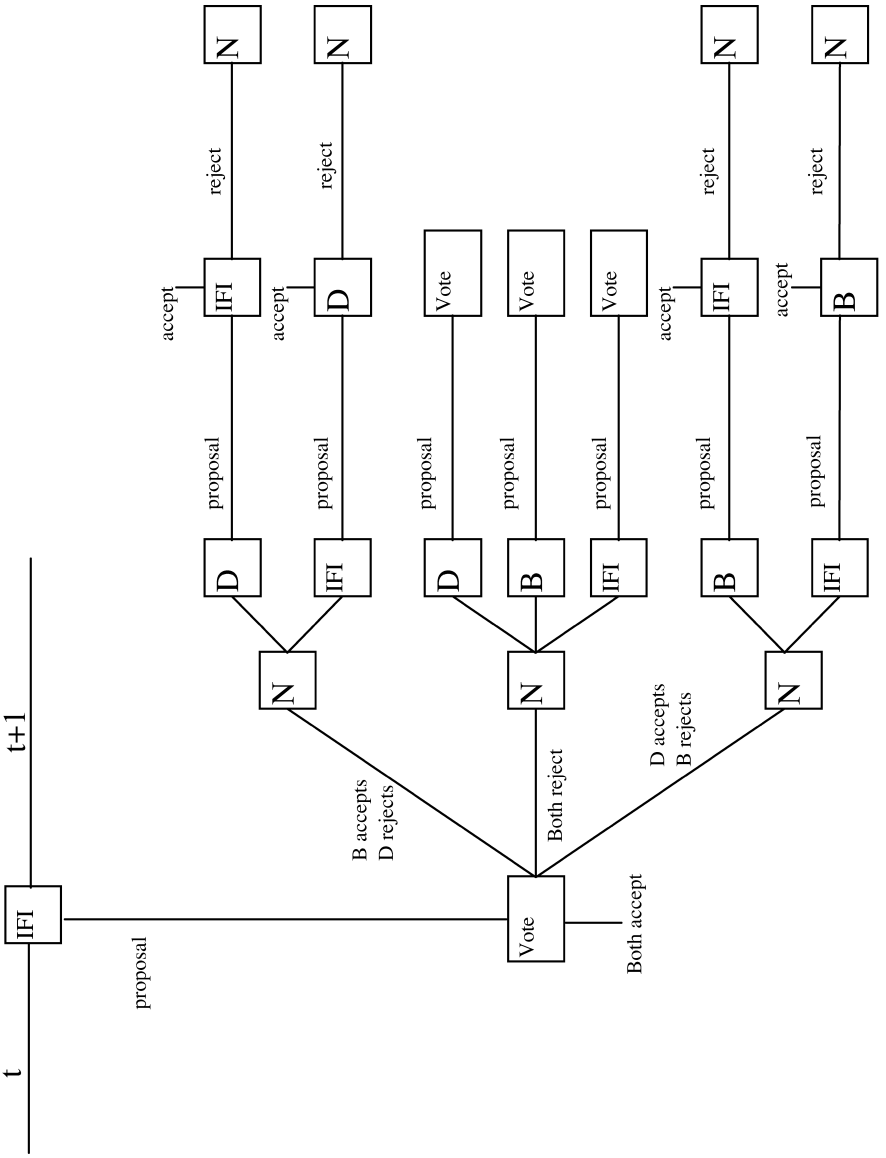

Fig. 3. The game with the possibility of partial agreements.

financial architecture will provide an analogy which can also fit into the bargaining framework with partial agreements.[30]

The three-way game with the possibility of partial debt-rescheduling agreements and random selection of a proposing side has a unique perfect equilibrium outcome. Appendix A shows that this equilibrium is supported by stationary strategies. In the equilibrium, the initial IFI proposal is immediately accepted by the banks and the debtor country. Consequently, the parties never exercise their option to strike bilateral bargains. The equilibrium outcome is characterized by the following division of the surplus:[31]

$$X_{II}^S = \frac{\delta(1+2r)}{\delta + r + \delta + 2r\delta}\,\Delta W;$$
$$X_{IB}^S = \frac{\delta}{\delta + r + \delta + 2r\delta}\,\Delta W; \quad X_{ID}^S = \frac{r}{\delta + r + \delta + 2r\delta}\,\Delta W. \tag{14}$$

Note that the non-unanimous nature of the debt-rescheduling regime under the Brady plan does not change the bargaining power of the banks vis-à-vis the debtor country; the ratio of their shares is the same as under the unanimous three-way deal: $X_{IB}^S/X_{ID}^S = \delta/r$. However, the relative bargaining power of the IFIs declines as the banks and the country gain the ability to come to separate agreements with the IFIs. Therefore, the IFI share of the surplus is smaller when there is a possibility of separate bilateral deals than when only a unanimous agreement among the three sides is possible. Another way of stating this result is that the policy of making partial deals entails larger transfers from the IFIs to the country

[30]Conditionality and lending into arrears perform functions that are in many ways analogous to the US corporate bankruptcy procedures. To the extent commercial creditors cannot sue to attach the proceeds of the IMF loans, the funds lent into arrears are analogous to the debtor-in-possession financing (see Eichengreen, 1999). There is also a certain similarity between the IMF conditionality and replacement of management in domestic bankruptcy with court-appointed trustee or a receiver (see Eichengreen and Portes, 1995). In the domestic context, the trustee or receiver acquires control over the debtor's assets and the fiduciary rights to represent the debtor in the negotiations with the creditors on the terms of a restructuring package. In the international context, the role of the receivership is performed by the IMF conditionality that gives the Fund a degree of control over the country's policies. The IMF also obtains a kind of fiduciary right to represent the country in subsequent negotiations with the banks and bondholders if the country agrees to the IMF-supervised reforms in exchange for a quick infusion of liquidity. The Fund, the World Bank and the official bilateral creditors often act on behalf of the countries implementing IMF-approved reforms and put pressure on the private creditors to reduce the countries' debts.

[31]Proof of this result is presented in Appendix A. Notice the difference between this result and the results obtained by Krishna and Serrano (1996) and Chae and Yang (1988) for the exit models with fixed proposal-making protocols. In the present model, the proposer's share is larger than the share it receives in the exit game with fixed protocol. This is due to the fact that random selection of a proposer makes the bargaining power of the parties in the bilateral subgames more equal. If only one party accepts the proposal, then the proposer may be given another chance to make a proposal in the ensuing bilateral subgame.

and its private creditors. The total amount of transfers from the IFIs when partial deals are possible is given by

$$A^S = \Delta W_R - \frac{\delta(1+2r)}{\delta + r + \delta + 2r\delta}\Delta W$$
$$= \frac{\delta + r}{\delta + r + \delta + 2r\delta}\Delta W_R - \frac{\delta + 2r\delta}{\delta + r + \delta + 2r\delta}\Delta W_D. \tag{15}$$

This amount exceeds the transfers that the IFIs make under the unanimous rescheduling regime:

$$A^S - A^U = \left[\frac{\delta + 3r\delta}{\delta + r + \delta + 3r\delta} - \frac{\delta + 2r\delta}{\delta + r + \delta + 2r\delta}\right]\Delta W > 0 \tag{16}$$

The relative bargaining power of the IFIs in the three-way negotiation declines after they gain the ability to come to an agreement with one of their negotiation counterparts without obtaining the other counterpart's consent (as under the policy of lending into arrears). This is because the country and its private creditors acquire additional bargaining power based on their ability to continue negotiating with the IFIs *bilaterally* if they are unhappy with the share of the total surplus that the IFIs offer them in their initial proposal. When the agreement requires the unanimous consent of all the parties, the only way for a party to prevent an undesirable agreement is by vetoing it and continuing the *three-way* game in which its bargaining power is balanced by the bargaining power of the two other players. Therefore, in the rescheduling process that allows partial agreements, the bargaining power of the debtor and the creditors vis-à-vis the IFIs is reinforced by their ability to resort to two-player subgames.

It is interesting to note that in the sovereign debt literature, the policy of lending into arrears is typically interpreted as a way of shifting the bargaining power away from the banks to the debtor country (e.g., Cline, 1995; Eichengreen and Portes, 1995; Wells, 1993). The multilateral models analyzed in this paper suggest that this is not the case if the IFIs are not simply a passive exogenous source of funds but rather a strategic actor in the three-way bargaining process. Under the latter assumption, the debtor country gains from the policy of lending into arrears not because its bargaining power increases relative to that of the banks, but rather because it becomes a stronger bargainer relative to the IFIs.

Since in this model the IFI transfers are bounded by the ROW's trade gains from averting the country's default, one implication of the IFI policies that make bilateral side deals possible is that they allow countries with less diversified economies to benefit from IFI participation in the rescheduling process. For example, in the case in which $\theta = 2$, $\epsilon = 4$, $r = 0.1$, $\delta = 0.15$, $\tau = 1.15$ and $k = 1.15$, the minimal share of differentiated product varieties that the country has to supply in the world market in order to have non-negative payoff from IFI participation in the rescheduling negotiation is equal to 28% if reaching the agreement requires

unanimous consent of the involved parties and 21% if the agreement can be worked out through a sequence of partial deals among the parties.

When the banks are a more patient party and thus can capture a larger share of the IFI transfers, it is impossible to prevent them from benefiting from the official concessional loans to the debtor country without hurting that country. Consequently, our model predicts that bailouts of the banks are inevitable as long as the banks remain more patient than the country. Since the latter assumption is the main reason for the existence of sovereign borrowing in this model, changing that assumption would not help to eliminate bailouts in the present framework, but rather would eliminate sovereign debt.

The results obtained in this section can be compared with the conclusions reached by Diwan and Rodrik (1992), who analyzed a model in which the main source of welfare gains from IFI participation in the three-way Brady deal is the IFI ability to enforce conditionality. This ability serves as a commitment mechanism, ensuring that new loans to the debtor country are spent on growth-generating investment projects rather than consumption. Although Diwan and Rodrik do not take into account the parties' bargaining power in their analysis of the Brady deal, they arrive at conclusions which are similar to the results obtained in this paper. In particular, they show that if the banks do not match the new IFI loans with a debt reduction sufficient to eliminate the debt overhang, then the IFIs will end up subsidizing the banks. By 'gaming' the IFIs into the three-way process and maintaining the debtor in overhang, the banks are able to extract resources from the IFIs. Thus, the IFI entry into the negotiation may lead to a bailout of the banks. This paper arrives at the same conclusion using a model that does not involve gains from conditionality but rather incorporates the parties' ability to exercise bargaining power.

Finally, we would like to relate our results to the existing empirical literature on the consequences of the Brady plan. Demirgüç-Kunt and Huizinga (1993) found that stock returns of banks that were heavily exposed to developing countries responded positively to announcements of large IMF balance-of-payments support loans to Latin American debtors in 1982–1983. Demirgüç-Kunt and Huizinga estimated that following information on the release of $43.4 billion by the IMF in 1983, $6 billion accrued to the bank shareholders. However, after the stock market went through a learning period early in the debt crisis, the bank stock prices absorbed the information that the use of large bilateral and multilateral official loans for private debt service became a standard pattern. There is no evidence that announcements of large official loans to debtor countries in the period from 1984 to 1988 resulted in abnormal bank stock returns. But in 1989, when the information on new IMF and World Bank loans was released in conjunction with the announcement of the Brady plan for debt reduction, Demirgüç-Kunt and Huizinga observed an even stronger bank stock-returns reaction than in the early 1980s. According to their estimates based on the change in market capitalization of the US commercial creditors following the release of details of the Brady plan, out

of $24 billion earmarked by the multilateral institutions for developing-country debt reduction, $22.4 billion devolved to the banks.

The conclusion that the banks were able to capture a larger share of the IFI transfers in recent Brady deals is confirmed by the estimates of debtor and bank benefits from the public-sector enhancements. Claessens et al. (1992) evaluated menu-based Brady deals for Mexico, the Philippines, Costa Rica, Venezuela and Uruguay. They compared the post-Brady deal secondary market value of bank claims on these debtor countries with the market value of these claims at prices that prevailed when expectations about any value-increasing changes in policies of the creditor governments and the multilateral institutions were still low. If the new official claims created by financing the enhancements for the Brady deals were truly senior, then the financial cost of the deals to the countries would have been the counterpart of the financial gain of the commercial banks. Under this scenario, the banks have increased the aggregate market value of their loan portfolios by $5.3 billion as a result of the five deals. Individual country costs were $2.189 billion for Mexico, $0.451 billion for the Philippines, $0.193 billion for Costa Rica, $2.444 billion for Venezuela, and $0.053 billion for Uruguay.[32]

The prediction that the banks are able to capture a larger share of the IFI transfers is consistent with estimates based not only on comparison of ex ante and ex post secondary market prices but other techniques as well.[33] Bulow and Rogoff (1991) interpreted the Brady deals as negotiated debt-reducing buybacks and showed that the cost of such a deal to a debtor country is bounded from below by the cost of an open-market buyback. Then, using the open-market buyback as a benchmark but ignoring the potential efficiency gains from debt-overhang relief, they estimated that Mexico may have lost up to $0.41 billion as a result of its 1989 negotiated buyback under the Brady plan. Claessens and van Wijnbergen (1993), using an option-based pricing model rather than secondary market prices, calculated that bank claims on Mexico as a result of the country's Brady deal rose in value between 3 and 24% of the market value of the official enhancements (which were valued at $3.6 billion). They concluded that Mexico captured up to 97% of the market value of the enhancements.

However, this conclusion is warranted from the *combined* perspective of

[32]If the official creditors had the same seniority status as commercial banks, then there would have been additional costs to the country as a result of the capital gains on the existing claims of the official creditors. According to Claessens et al. (1992), under this alternative the total cost of the Brady deals to the five countries was $18.4 billion and the individual country costs were $8.638 billion for Mexico, $3.151 billion for the Philippines, $0.907 billion for Costa Rica, $5.583 billion for Venezuela, $0.407 billion for Uruguay.

[33]Analyses based on secondary market prices suffer from a number of shortcomings. First, a number of exogenous factors (most notably the oil price) could significantly contaminate the comparison between ex ante and ex post prices as a measure of gains accruing to the banks. Further, it is very hard to separate in the price of the Brady bonds the market value of the pure claims on the debtor country from the market value of the collateral enhancements financed by the IFIs.

Mexico and its public-sector lenders and donors. The enhancements were not financed by grants but rather by loans and therefore generated new claims on the debtor country. The true seniority (as well as the true value) of these claims is unclear given the relatively modest change in the value of the bank claims on Mexico as a result of the deal. Therefore, the value of the transfers from the IFIs to Mexico is ambiguous. If the IFI claims were riskless and will be repaid in full, then the IFI transfers to Mexico were almost zero. However, if additional official loans for enhancements contain an implicit 'grant' element, then the country's cost of the debt-rescheduling agreement is reduced by the grant component of the new official loans.[34]

5. Conclusion

This paper has explored the static and the dynamic bargaining implications of the IFI sovereign debt policy. By considering trade between the debtor country and the rest of the world in the monopolistic competition framework, we have shown that the bargaining power of the country vis-à-vis the rest of the world can be linked to its market power in international trade. Therefore, in the three-way negotiation among a country, its private creditors and the IFIs representing the rest of the world, a country with a more open and diversified economy will be able to use its market power as leverage for extracting larger transfers from the IFIs. This conclusion differs from earlier analyses that abstracted from the debtor country's bargaining power vis-à-vis the official financial institutions and emphasized only the effect of the country's trade dependency (i.e., its lack of market power in trade) on its creditworthiness in bilateral negotiations with the private creditors.

This paper has also highlighted the dynamic bargaining effects of recent changes in IFI sovereign debt policy. The changes in the timing and conditionality of official loans after the introduction of the Brady plan did not alter the bargaining power of the debtor country vis-à-vis its commercial creditors. Consequently, most of the transfers implicit in the IFI concessional credits continue to devolve to the commercial creditors. In this sense, the Brady plan did not succeed in increasing the commercial creditors' burden-sharing in debt reduction. Although the Brady policies are more favorable for the debtor country than the previous IFI policies, this outcome is achieved at the expense of official creditors rather than private creditors.

[34]To assess the effects of various debt reduction and debt rescheduling deals on the remaining value of outstanding claims on the debtor country, it necessary to know the post-deal market value of *all* claims. The main difficulty is that there is no secondary market for official multilateral and bilateral debt. Demirgüç-Kunt and Fernández-Arias (1992) estimated the unobservable official debt prices by analyzing the effect of the face value of different types of debt on the price of private debt. They found that the official creditors, and especially the multilateral, shared a disproportionately large share of the debt-reduction burden in the 1980s.

Certainly, the IFI-mediated debt-reduction agreements are not necessarily zero-sum games and the debtor country benefits not only at the expense of the IFI shareholder countries but also by increasing its own economic growth rates. A reduction of disincentives for investment stemming from the debt overhang can have a significant macroeconomic impact. Furthermore, involvement of the IFIs enhances the debtor country's adjustment commitment, which can improve its growth prospects. Although the simple model developed in this paper does not take into account these sources of efficiency gains from debt reduction, the recent experiences of countries that rescheduled their debts under the Brady framework suggests that these gains can be substantial (see Claessens et al., 1993). Modeling these efficiency gains within a sovereign-debt bargaining framework with the strategic official intermediaries is an interesting avenue for future research.

Acknowledgements

I thank Robert Wilson, Jeremy Bulow, Kenneth Rogoff, Robin Wells, Sudipto Bhattacharya, Jonathan Eaton, and anonymous referees for helpful comments and suggestions.

Appendix A

The equilibrium debt-rescheduling agreement in the framework with partial bargains

For simplicity and without loss of generality, we consider a three-player bargaining framework with partial agreements in which all players share the same discount factor, $\Delta = 1/(1+\delta)(1 > \delta > 0)$. Also for simplicity, the size of the surplus over which the players bargain is normalized to 1.

Denote the subgame that begins with a proposal put forward by player i by G_i (N, q) where N is a set of players who are still in the game (e.g., $N = \{i,j,k\}$ *or* $N = \{j,k\}$ etc.) and q is the size of the remaining surplus over which they bargain. The subgame, which begins with Nature choosing a proposer, is denoted by $G_R(N,q)$. An equilibrium proposal $X = (X_i, X_j, X_k)$ made by player i in period t and accepted by the two other players is denoted by (X,t). The following proof shows that the game $G_i(\{i,j,k\},1)$ has a unique subgame perfect equilibrium which is stationary.[35] The proof consists of four steps.

[35]Note that $G_i(\{i,j,k\},1)$ is not a game of perfect information because at the response stage several players move simultaneously. Hence, the standard existence theorems do not apply to this game and there can be no presumption about the existence of a subgame perfect equilibrium until it is actually found.

STEP 1.

The agreement $X^* = \left(\frac{2-\Delta}{2+\Delta}, \frac{\Delta}{2+\Delta}, \frac{\Delta}{2+\Delta}\right)$ *reached in period* 1 *is a perfect equilibrium outcome.*

The perfect equilibrium strategies are constructed as follows:[36] let X be a proposal by player i in the beginning of the game $G_i(\{i,j,k\},1)$. Define the set of players $A(X)$ who will accept X and the set $R(X)$ of those players who will reject X according to the algorithm:

$$A' = \left\{ j \in N\backslash\{i\}\text{: } for\ k \neq j,\ k \in N\backslash\{i\},\ X_j \geq \min\left\{\frac{\Delta}{2+\Delta}, (1-X_k)\frac{\Delta}{2}\right\}\right\}$$

If $A' = \emptyset$, then

$$A'' = \begin{cases} \{j\} & \text{if} \quad X_j \geq X_k \quad \text{and} \quad X_j \geq \Delta/3 \\ \{k\} & \text{if} \quad X_k \geq X_j \quad \text{and} \quad X_k \geq \Delta/3 \\ \{\emptyset\} & \text{if} \quad X_j < \Delta/3 \quad \text{and} \quad X_k < \Delta/3 \end{cases}$$

If $A' \neq \emptyset$, then $A'' = \emptyset$.

Finally, $A(X) = A' \cup A''$ and $R(X) = N\backslash(\{i\} \cup A(X))$.

It can be verified that the described strategies form a perfect equilibrium. Since $\Delta < 1$, a strategy is the best response if the player who adopts it cannot do better by deviating from it at any single stage of the infinite game and following the prescribed strategy before and after the deviation.

Consider the player in A''. He is definitely at best response because the other responder is rejecting the offered share. If the player in A'' also rejected the share offered to him, then the game would continue into the next subgame, where players follow the equilibrium strategies. The discounted expected payoff to the player in A'' from continuing into the next subgame will then be

$$\Delta\left(\frac{1}{3}\frac{2-\Delta}{2+\Delta} + \frac{1}{3}\frac{\Delta}{2+\Delta} + \frac{1}{3}\frac{\Delta}{2+\Delta}\right) = \frac{\Delta}{3} < \frac{\Delta}{2+\Delta}.$$

Now consider a player in A'. If he is the only one who accepts, then by rejecting he could get at most $\Delta/3 < \Delta/(2+\Delta)$. Therefore he is at best response. If there are two players in A', then at least one of them must have $X_j > \Delta/(2+\Delta)$, which means that this player is at best response. If a player is one of the two players who choose to accept the offered shares in equilibrium, then by rejecting he is worse off because the share offered to him is by definition greater than or equal to his expected payoff from the bilateral subgame with the proposing player, $(1-X_k)\Delta/2$.

[36] Krishna and Serrano (1996) considered similar strategies for a game where players make proposals according to a fixed protocol.

If a player in $R(X)$ is the only one who rejects, then he is at best response because his discounted expected payoff from the *bilateral* continuation with the proposer is greater than what he is offered in X. If there are two players who reject the shares offered to them in X, then their discounted expected payoffs from rejecting and continuing into the *trilateral* subgame, $\Delta/3$, is greater than the shares offered to them in X.

The proposer is at best response because given the strategies of the other players if he tries to offer himself more than $(2-\Delta)/(2+\Delta)$ at the expense of one or both of the other players, his proposal would be rejected and the game would continue into either bilateral or trilateral subgames after either of which he is worse off. In the trilateral subgame his discounted expected payoff is $\Delta/3$ and in the bilateral subgame it is the discounted average of the share he offered to himself and to the player who led the game into bilateral continuation, i.e., at most

$$\left(1-\frac{\Delta}{3}\right)\frac{\Delta}{2}<\frac{2-\Delta}{2+\Delta}.$$

STEP 2.

If an equilibrium is reached in the game $G_i(\{i,j,k\},1)$, *then it is reached unanimously in one stage* (*i.e., not through partial agreements*).

Obviously, a player who proposes a division of the surplus acceptable to only one of the responders and subsequently divides the remainder of the surplus in the separate bilateral agreement with the rejecting player can do better by offering to the rejecting player his discounted expected payoff from the bilateral subgame, i.e., $(1-X_k)-(1-X_k)\ \Delta/2>(1-X_k)\Delta/2$.

STEP 3.

If (X,t) *is a unanimous agreement, then* $X=X^*$.

Since X is an equilibrium, all players should be at best response. Hence, $X=(X_i, X_j, X_k)$ must be a solution to the maximization problem:

$$\max_{X_j,X_k}\quad 1-X_j-X_k$$

$$\text{subject to}\quad \begin{cases} X_j\geq(1-X_k)\dfrac{\Delta}{2} \\ X_k\geq(1-X_j)\dfrac{\Delta}{2}\end{cases}$$

But the solution to this problem is X^*.

STEP 4.

There cannot be an equilibrium agreement (X^*,t) *reached at* $t>1$.

Since an equilibrium agreement is always given by X^* and reached unanimous, the expected payoff to any player from the trilateral subgame $G_R(\{i,j,k\},1)$ is at most $1/3$. If the agreement X^* is reached after the proposal of player i in period $t>1$, then in all previous periods either X^* was not proposed or was proposed but

unanimously rejected. However, unanimous rejection is the best response for both responders only if they expect a higher discounted payoff from the ensuing subgame $G_R(\{i,j,k\},1)$. Since this is not the case, i.e., $\Delta/3 < \Delta/(2+\Delta)$, the agreement X^* was not proposed by any of the proposers selected before t. Therefore those players whose strategies in periods before t were to propose agreements other than X^* were not at best response. By moving the game into the subgame $G_R(\{i,j,k\},1)$, they could at most get $\Delta/3$, while by proposing X^* they could immediately get $(2-\Delta)/(2+\Delta)$. Therefore, (X^*,t) cannot be an equilibrium for $t>1$. Hence, the only possible equilibrium is $(X^*,1)$. □

References

Aggarwal, V., 1996. In: Debt games: Strategic Interaction in International Debt Rescheduling. Cambridge University Press, Cambridge, New York and Melbourne.

Aizenman, J., 1991. Trade dependency, bargaining, and external debt. Journal of Development Economics 31, 101–120.

Baron, D., Ferejohn, J., 1989. Bargaining in legislatures. American Political Science Review 83, 1181–1207.

Bhattacharya, S., Detragiache, E., 1994. The role of multilateral institutions in the market for sovereign debt. Scandinavian Journal of Economics 96, 515–529.

Bulow, J., Rogoff, K., 1988. Multilateral negotiations for rescheduling developing country debt. International Monetary Fund Staff Papers 35, 664–668.

Bulow, J., Rogoff, K., 1989a. A constant recontracting model of sovereign debt. Journal of Political Economy 97, 155–178.

Bulow, J., Rogoff, K., 1989b. Sovereign debt: is to forgive to forget? American Economic Review 79, 43–50.

Bulow, J., Rogoff, K., 1991. Sovereign debt repurchases: no cure for overhang. Quarterly Journal of Economics 106, 1219–1235.

Bulow, J., Rogoff, K., Bevilaqua, A., 1992. Official creditor seniority and burden-sharing in the former soviet bloc. Brookings Papers on Economic Activity 1, 195–222.

Chae, S., Yang, J.-A., 1988. The unique perfect equilibrium of an N-person bargaining game. Economics Letters 28, 221–223.

Chang, R., 1995. Private investment and sovereign debt negotiations. International Economic Review 36, 387–405.

Chatterjee, K., Dutta, B., Ray, D., Sengupta, K., 1993. A noncooperative theory of coalitional bargaining. Review of Economic Studies 60, 463–477.

Claessens, S., Diwan, I., 1990. Investment incentives: new money, debt relief, and the critical role of conditionality in the debt crisis. World Bank Economic Review 4, 21–41.

Claessens, S., Diwan, I., Fernandez-Arias, E., 1992. Recent Experience with Commercial Bank Debt Reduction. Policy Research Working Paper 995, World Bank.

Claessens, S., van Wijnbergen, S., 1993. Secondary market prices and Mexico's Brady deal. Quarterly Journal of Economics 108, 967–982.

Claessens, S., Oks, D., van Wijnbergen, S., 1993. Interest Rates, Growth and External Debt: The Macroeconomic Impact of Mexico's Brady Deal. Policy Research Working Paper 1147, World Bank.

Cline, W., 1995. In: International Debt Reexamined. Institute for International Economics, Washington, DC.

Cohen, D., Sachs, J., 1986. Growth and external debt under risk of debt repudiation. European Economic Review 30, 529–560.

Cole, H., Kehoe, P., 1998. Models of sovereign debt: partial versus general reputations. International Economic Review 39, 55–70.

Demirgüç-Kunt, A., Detragiache, E., 1994. Interest rates, official lending, and the debt crises: a reassessment. Journal of Development Economics 44, 263–285.

Demirgüç-Kunt, A., Fernández-Arias, E., 1992. Burden-Sharing Among Official and Private Creditors. Policy Research Working Paper 943, World Bank.

Demirgüç-Kunt, A., Huizinga, H., 1993. Official credits to developing countries: implicit transfers to the banks. Journal of Money, Credit and Banking 25, 430–445.

Diwan, I., 1990. Linking trade and external debt strategies. Journal of Development Economics 29, 293–310.

Diwan, I., Rodrik, D., 1992. In: External Debt, Adjustment, and Burden Sharing: A Unified Framework. International Finance Section, Department of Economics, Princeton University, Princeton, NJ.

Dooley, M., 1995. A retrospective on the debt crisis. In: Kenen, P. (Ed.), Understanding Interdependence: The Macroeconomics of the Open Economy. Princeton University Press, Princeton, NJ, pp. 262–287.

Eaton, J., Engers, M., 1999. Sanctions: some simple analytics. American Economic Review 89, 409–414.

Eaton, J., Gersovitz, M., 1981. Debt with potential repudiation: theoretical and empirical analysis. Review of Economic Studies 48, 289–309.

Eichengreen, B., 1999. In: Toward a New International Financial Architecture: A Practical Post-Asia Agenda. Institute for International Economics, Washington, DC.

Eichengreen, B., Portes, R., with Cornelli, F., Felli, L., Franks, J., Greenwood, C., Mercer, H., Vitale, G., 1995. In: Crisis? What crisis? Orderly Workouts for Sovereign Debtors. Centre for Economic Policy Research, London.

Fernández, R., Özler, S., 1999. Debt concentration and bargaining power: large banks, small banks, and secondary market prices. International Economic Review 40, 333–355.

Fernández, R., Rosenthal, R., 1990. Strategic models of sovereign-debt renegotiations. Review of Economic Studies 57, 331–349.

Goldberg, P., Knetter, M., 1999. Measuring the intensity of competition in export markets. Journal of International Economics 47, 27–60.

Gros, D., 1987. A note on the optimal tariff, retaliation and the welfare loss from tariff wars in a framework with intra-industry trade. Journal of International Economics 23, 357–367.

Grossman, G., Helpman, E., 1996. Foreign investment with endogenous protection. In: Feenstra, R., Grossman, G., Irwin, D. (Eds.), The Political Economy of Trade Policy: Papers in Honor of Jagdish Bhagwati. MIT Press, Cambridge and London, pp. 199–223.

Kletzer, K., Wright, B., 2000. Sovereign debt as intertemporal barter. American Economic Review 90, 621–639.

Krishna, V., Serrano, R., 1996. Multilateral bargaining. Review of Economic Studies 63, 61–80.

Krugman, P., 1991. Is bilateralism bad. In: Helpman, E., Razin, A. (Eds.), International Trade Theory and Trade Policy. MIT Press, Cambridge and London, pp. 9–23.

Özler, S., 1989. On the relation between reschedulings and bank value. American Economic Review 79, 1117–1131.

Radelet, S., 1999. In: Orderly Workouts for Cross-Border Private Debt. Photocopy. Harvard Institute for International Development.

Rodrik, D., 1995. Why is There Multilateral Lending? Working Paper 5160, National Bureau of Economic Research.

Rubinstein, A., 1982. Perfect equilibrium in a bargaining model. Econometrica 50, 97–109.

Samuelson, P., 1954. The transfer problem and transport costs II: Analysis of effects of trade impediments. Economic Journal 64, 264–289.

Spiegel, M., 1996. Burden sharing in sovereign debt reduction. Journal of Development Economics 50, 337–351.

Wells, R., 1993. Tolerance of arrearages: how IMF loan policy can effect debt reduction. American Economic Review 83, 621–633.